SER. No. •

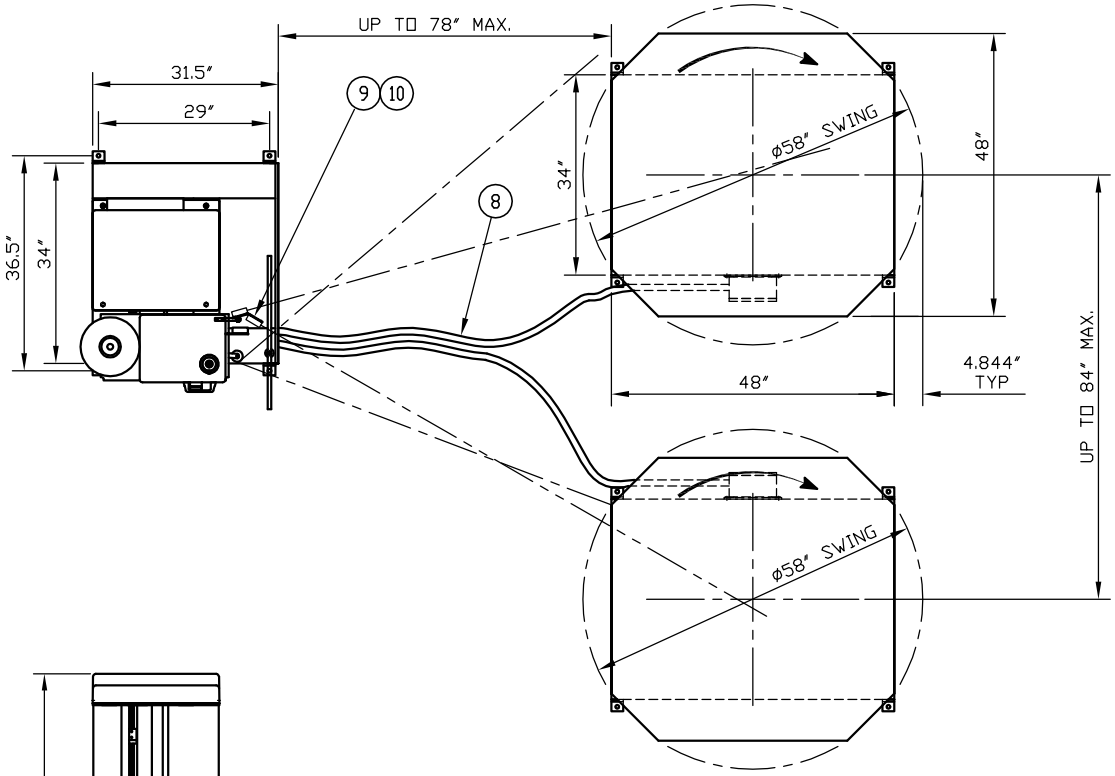

MATERIAL LIST			
ITEM	QTY.	DESCRIPTION	PART No.
1	2	HIGH PROFILE TURNTABLE BASE ASSEMBLY	G2100-019-01-00-R1
2	1	HIGH PROFILE TOWER BASE ASSEMBLY	G2500-055-00
3	2	HIGH PROFILE 48" x 48" TURNTABLE	C863-R1
4	1	HIGH PROFILE STANDARD TOWER ASSEMBLY	G2700-047-00
5	1	20" FILM RAPID THREAD PRESTRETCH CARRIAGE	G2900-083-00
6	1	CONTROL PANEL ASSEMBLY	E2100-121-R2
7	1	FILM ROPING BAR	C2942
8	2	TOWER BASE TO TURNTABLE WIRING HARNESS	.
9	1	PHOTO-EYES MOUNTING BRACKET	C2599
10	1	PHOTO-EYES MOUNTING BRACKET SUPPORT	C2507

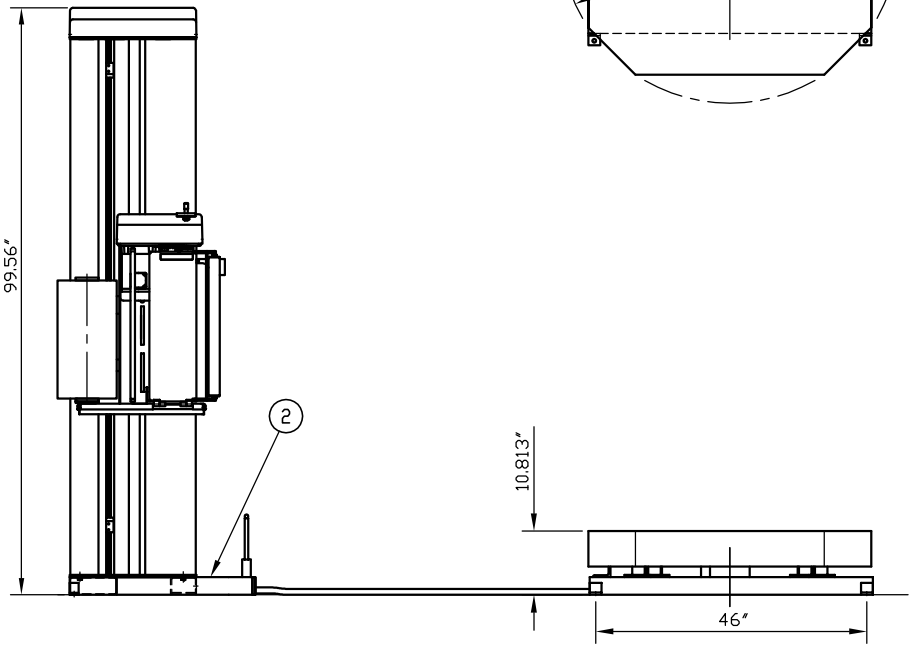

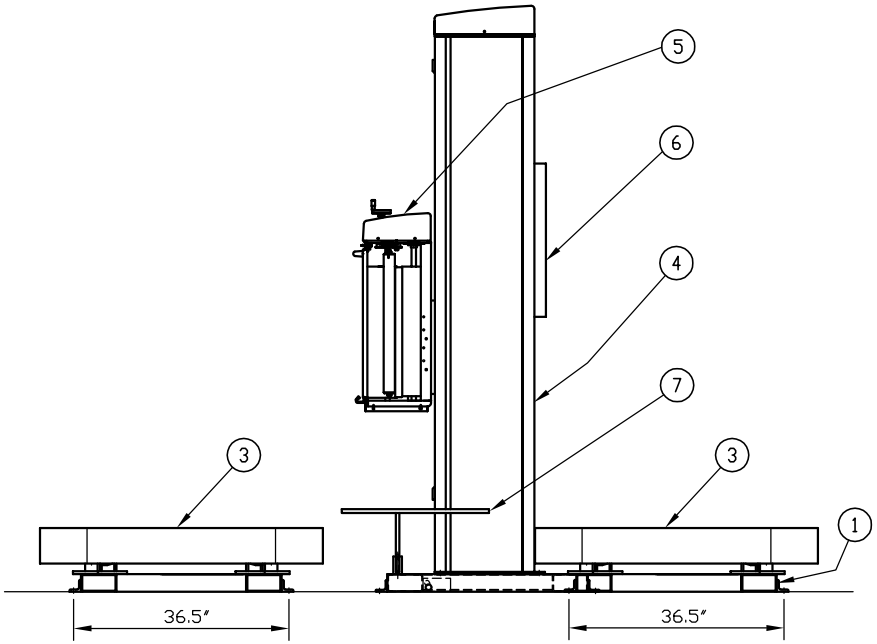

NOTE: TO PREVENT TIPPING, THE TOWER BASE MUST BE LAG-BOLTED TO THE FLOOR BEFORE OPERATING!

No.	DESCRIPTION	DATE
.	.	.

COUSINS PACKAGING INC.

SCALE 1 : 16		TITLE MODEL HP-SW STRETCH WRAP MACHINE c/w SPLIT BASE/ DUAL TURNTABLE CONSTRUCTION - ASSEMBLY	
DATE AUGUST 12, 2011			
DRAWN BY SD	CHECKED BY .	DRAWING NO. G3000-081-00	SHEET 1 OF 1 / REVISION 0